INSTALLER'S SPECIAL

Systems For Professionals

CELLPACK
Electrical Products

a BBC GROUP company

CELLPACK
Electrical Products

Cellpack Electrical Products

Systems For Professionals

Technology & Innovation

Quality & Service

SMH

		L1 mm	mm²	
			1x	3x
SMH1	10-25	300	10 - 25	
	35-70	400	35 - 70	
	95-240	500	95 - 240	
	150-300	500	150 - 300	
	300-500	600	300 - 500	
SMH3	1.5-16	400		1.5 - 16
	6-25	500		6 - 25
	25-70	700		25 - 70
	95-150	850		95 - 150
	185-300	1100		185 - 300

CELLPACK
Electrical Products

SMH

			4x	5x
		L1 mm	mm²	
SMH4	1.5-6	200	1.5 - 6	
	1.5-16	400	1.5 - 16	
	6-25	500	6 - 25	
	16-50	600	16 - 50	
	25-95	600	25 - 95	
	25-150	700	25 - 150	
	95-300	1000	95 - 300	
SMH5	1.5-6	250		1.5 - 6
	1.5-10	250		1.5 - 10
	1.5-16	400		1.5 - 16
	16-25	500		16 - 25
	35-95	500		35 - 95
	120-240	800		120 - 240

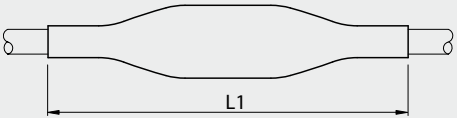

CELLPACK
Electrical Products

SMH

		L1 mm		mm²
SMH	7/10 1.5-2.5	330	7 - 10	1.5 - 2.5
	12/14 1.5-2.5	500	12 - 14	1.5 - 2.5
	18/24 1.5-2.5	500	18 - 24	1.5 - 2.5
	30/30 1.5-2.5	600	30 - 30	1.5 - 2.5
	34/40 1.5-2.5	600	34 - 40	1.5 - 2.5

CELLPACK
Electrical Products

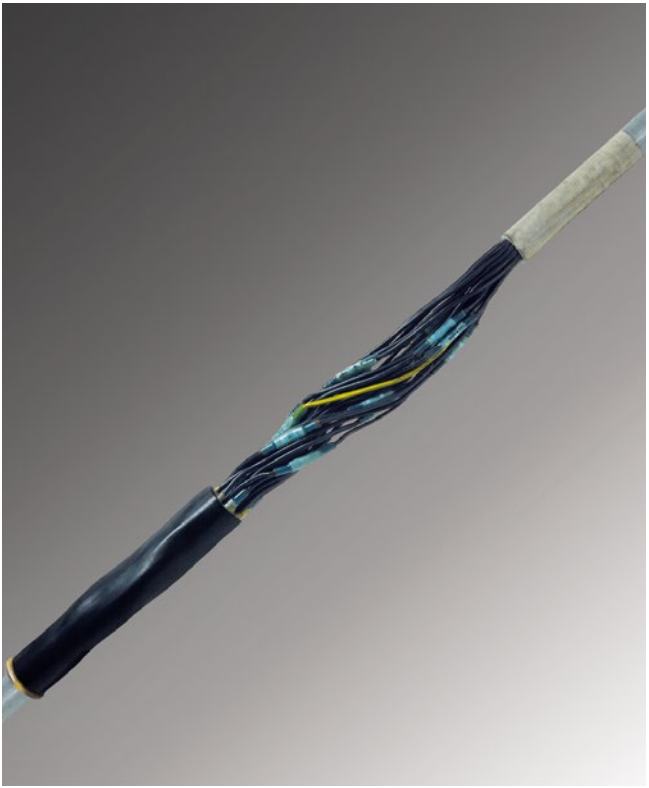

SMHSV

4x

		L1 mm	mm²
SMHSV4	6-50	500	6 - 50
	16-95	650	16 - 95
	50-150	800	50 - 150
	95-240	1000	95 - 240

CELLPACK
Electrical Products

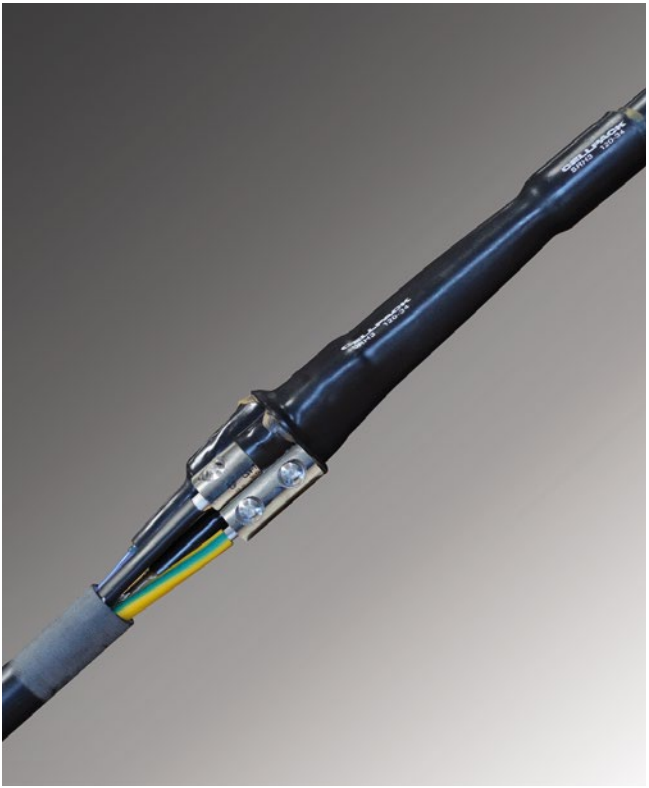

SB 2:1

		L mm	D mm	D* mm	W* mm	
SB	1.2-0.6	15	1.2	0.6	0.41	1
	1.6-0.8	15	1.6	0.8	0.43	1
	2.4-1.2	15	2.4	1.2	0.51	1, 2, 3
	3.2-1.6	15	3.2	1.6	0.51	1, 2, 3
	4.8-2.4	10	4.8	2.4	0.51	1, 2, 3
	6.4-3.2	10	6.4	3.2	0.64	1, 2, 3
	9.5-4.8	10	9.5	4.8	0.64	1, 2, 3
	12.7-6.4	8	12.7	6.4	0.64	1, 2, 3
	19.1-9.5	7	19.1	9.5	0.76	1, 2, 3
	25.4-12.7	4	25.4	12.7	0.89	1, 2, 3

1 2 3

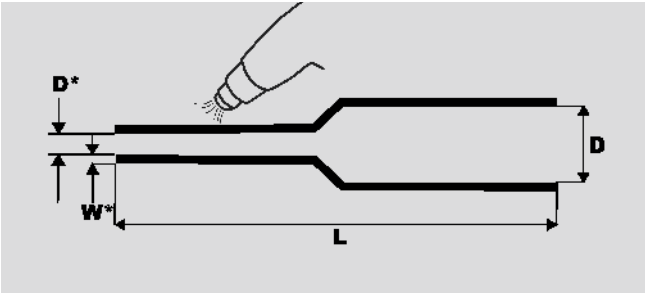

SB 3:1

CELLPACK
Electrical Products

		L mm	D mm	D* mm	W* mm
SB	1.5-0.5	15	1.5	0.5	0.45
	3.0-1.0	15	3	1	0.55
	6.0-2.0	10	6	2	0.65
	9.0-3.0	10	9	3	0.75
	12.0-4.0	8	12	4	0.75
	18.0-6.0	7	18	6	0.75
	24.0-8.0	4	24	8	1.00

SRH2

		L mm	D mm	D* mm	W* mm
SRH2	8-2	1	8	2	1.7
	12-3	1	12	3	2.2
	22-6	1	22	6	2.6
	34-7	1	34	7	2.6
	40-12	1	40	12	2.6
	56-16	1	56	16	2.7
	63-19	1	63	19	2.8
	75-22	1	75	22	3
	95-26	1	95	26	3.2
	120-34	1	120	34	3.3
	140-42	1	140	42	3.5
	160-50	1	160	50	3.5

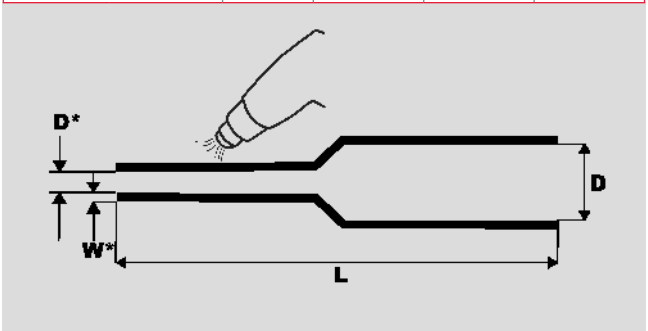

CELLPACK
Electrical Products

SRH3

		L mm	D mm	D* mm	W* mm
SRH3	12-3	1	12	3	2.6
	16-4	1	16	4	3.1
	22-6	1	22	6	2.7
	33-8	1	33	8	4
	45-12	1	45	12	4.4
	55-15	1	55	15	4.4
	75-20	1	75	20	4.5
	92-25	1	92	25	4.6
	130-34	1	130	34	4.8
	160-50	1	160	50	4.6

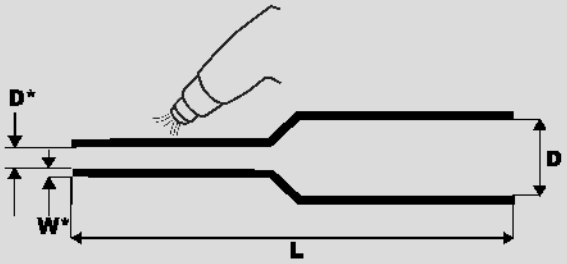

CELLPACK
Electrical Products

SKH

		L mm	L* mm	D mm	D* mm	W* mm
SKH	10-4	45	33	10	4	2
	15-5	45	45	15	5	2
	22-9	75	70	22	9	2.5
	35-15	100	95	35	15	3
	55-25	150	140	55	25	3.5
	75-30	165	155	75	30	3.5
	95-40	175	155	95	40	4
	110-45	145	130	110	45	4

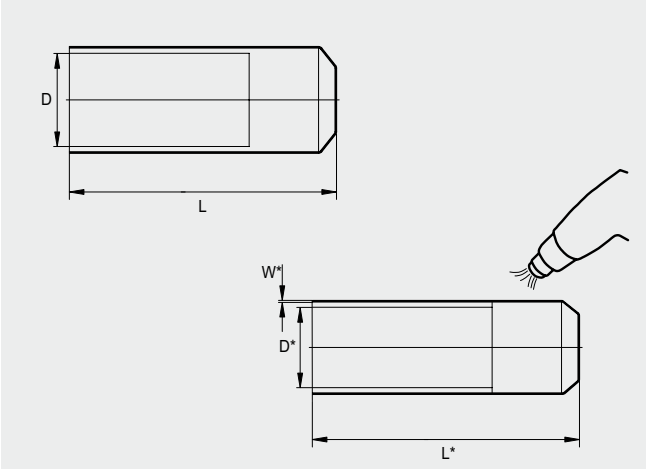

CELLPACK
Electrical Products

SEH

		L1 mm	L1* mm	L2 mm	D1 min. mm	D1 max. mm	D2 min. mm	D2 max. mm	W* mm	Ø mm²
SEH2	30-10	65	90	15	30	10	12	4	1.5	2.5 - 25
	50-24	85	120	25	50	24	21	7	3	25 - 120
	60-20	90	130	40	60	20	36	18	3	95 - 150
SEH3	25-9	50	70	15	25	9	9	3	2.5	1.5 - 16
	35-15	85	100	20	35	15	13	4	2.5	6 - 35
	55-23	130	170	30	55	23	25	9	3	35 - 150
	75-28	170	200	40	75	28	35	13	3.5	120 - 300
	110-35	180	210	45	110	35	50	17	4	185 - 400
	125-59	185	260	50	125	59	60	24	3.5	240 - 500
SEH4	28-9	55	70	15	28	9	8	2	2	1.5 - 10
	35-15	80	100	20	35	15	13	4	2.5	6 - 35
	47-23	130	170	30	47	23	20	8	3.5	35 - 95
	60-25	160	180	30	60	25	25	8	3.5	35 - 150
	78-36	170	220	40	78	36	30	12	3.5	95 - 240
	95-36	170	220	45	96	36	35	14	4	120 - 300
SEH5	65-15	82	100	31	65	15	22	3	4	4 - 70
	80-33	150	175	53	80	33	26	8	3	35 - 150
	100-42	170	190	60	100	42	34	10	3	95 - 240

CELLPACK
SEH4
CELLPACK
SEH2

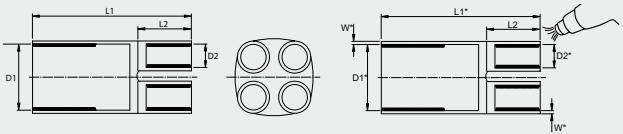
L1
L2
D2
D1
L1*
L2
W*1
D2*
D1*
W*

SRMAHV

		D mm	D* mm	D* min. mm	D* max. mm	W* mm
SRMAHV	28-10 / 250	32	10	10	28	2.3
	28-10 / 500	32	10	10	28	2.3
	28-10 / 750	32	10	10	28	2.3
	28-10 / 1000	32	10	10	28	2.3
	43-12 / 250	52	12	12	43	3.4
	43-12 / 500	52	12	12	43	3.4
	43-12 / 750	52	12	12	43	3.4
	43-12 / 1000	52	12	12	43	3.4
	43-12 / 1500	52	12	12	43	3.4
	72-18 / 250	82	18	18	72	3.4
	72-18 / 500	82	18	18	72	3.4
	72-18 / 750	82	18	18	72	3.4
	72-18 / 1000	82	18	18	72	3.4
	72-18 / 1500	82	18	18	72	3.4
	72-18 / 2000	82	18	18	72	3.4
	93-26 / 250	105	26	26	93	3.4
	93-26 / 500	105	26	26	93	3.4
	93-26 / 750	105	26	26	93	3.4
	93-26 / 1000	105	26	26	93	3.4
	93-26 / 2000	105	26	26	93	3.4
	115-30 / 250	130	30	30	115	2.3
	115-30 / 500	130	30	30	115	2.3
	115-30 / 750	130	30	30	115	2.3

		D mm	D* mm	D* min. mm	D* max. mm	W* mm
SRMAHV	115-30 / 1000	130	30	30	115	2.3
	115-30 / 1500	130	30	30	115	2.3
	125-32 / 250	143	32	32	125	2.3
	125-32 / 500	143	32	32	125	2.3
	125-32 / 750	143	32	32	125	2.3
	125-32 / 1000	143	32	32	125	2.3
	125-32 / 1500	143	32	32	125	2.3
	198-50 / 1000	220	50	50	198	2.3

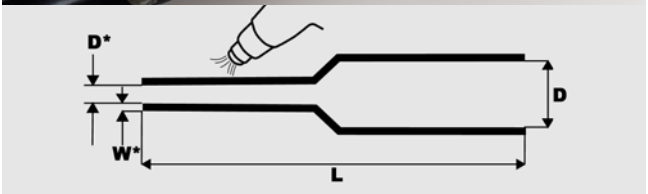

MR 0

		L mm	D mm	H mm	max. Ø mm	1x	2x	3x	4x	5x
						mm²				
MR	02	120	26	40	16	25	6	4	2.5	1.5
	05	180	26	40	16	25	6	4	4	2.5

		L mm	D mm	H mm	max. Ø mm	0,75 mm²	1,5 mm²
MR	02	120	26	40	16	8	5
	05	180	26	40	16	16	8

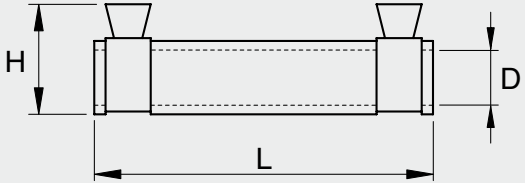

CELLPACK
Electrical Products

M

		L mm	D mm	H mm	max. Ø mm	1x	2x	3x	4x	5x
						mm²				
M	0	185	32	37	15	25	10	6	6	4
	1	240	40	45	22	95	25	16	16	10
	2	265	45	50	30	185	50	35	25	16
	2,5	310	58	65	37	300	70	70	50	35
	3	355	70	80	42	400	120	95	70	50
	4	430	90	98	52	500		120	95	70
	5	550	110	120	62	1000		240	185	120
	6	660	145	165	80			300	240	185
	7	900	150	190	90			400	300	240

						3x	4x	3x	4x
M	1	240	40	45	22	10/10			
	2	265	45	50	30	25/25	16/16	16	16
	2,5	310	58	65	37	35/35	25/25	35	16 - 35
	3	355	70	80	42	50/50	50/25	50	35 - 50
	4	430	90	98	52	95/95	70/35	95	50 - 95
	5	550	110	120	62	150/150	120/70	120	95 - 120
	6	660	145	165	80	240/240	240/120	240	120 - 240
	8	1100	150	190	90	400/400	300/150	400	300 - 400

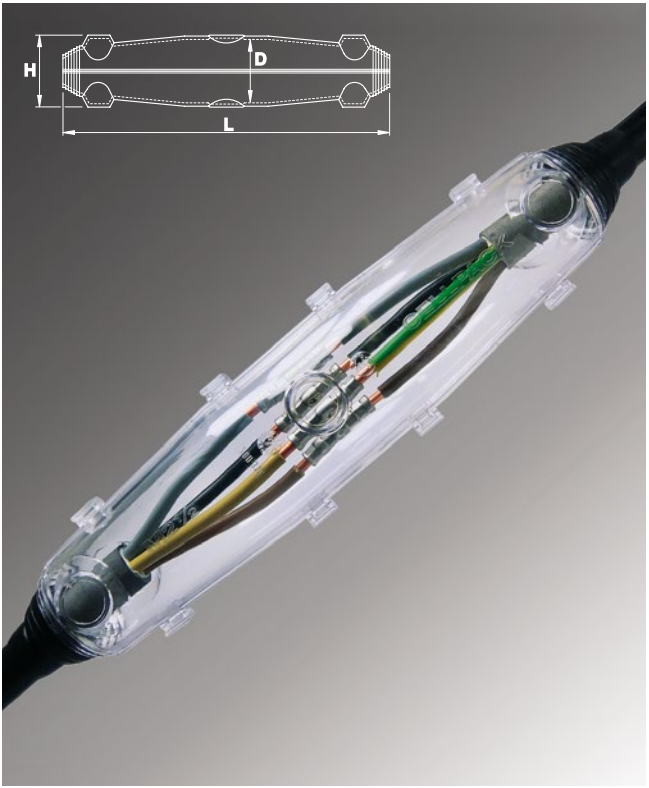
H
D
L

M-Euroline

		L mm	D mm	H mm	max. Ø mm	mm²			
						1x	3x	4x	5x
M	11	190	36	50	26	50	10	10	6
	12	260	47	63	34	150	25	25	16
	13 S	310	55	68	43	240	35	35	25
	13	360	55	75	43	400	50	50	35
	14 S	350	70	95	48	630	70	70	50
	14	400	70	95	48	630	95	95	70
	15	530	100	120	63	1000	150	150	120
	16	700	125	160	81		240	240	185
	17	900	150	190	90		300	400	240

						3x	4x	4x
M	11	190	36	50	26	10/10		4
	12	260	47	63	34	25/25	16/16	10
	13 S	310	55	68	43	35/35	25/16	25
	13	360	55	75	43	50/50	25/16	35
	14 S	350	70	95	48	70/70	50/50	50
	14	400	70	95	48	95/95	50/50	70
	15	530	100	120	63	150/150	120/70	120
	16	700	125	160	81	240/120	185/70	240
	17	900	150	190	90	300/300	240/120	240

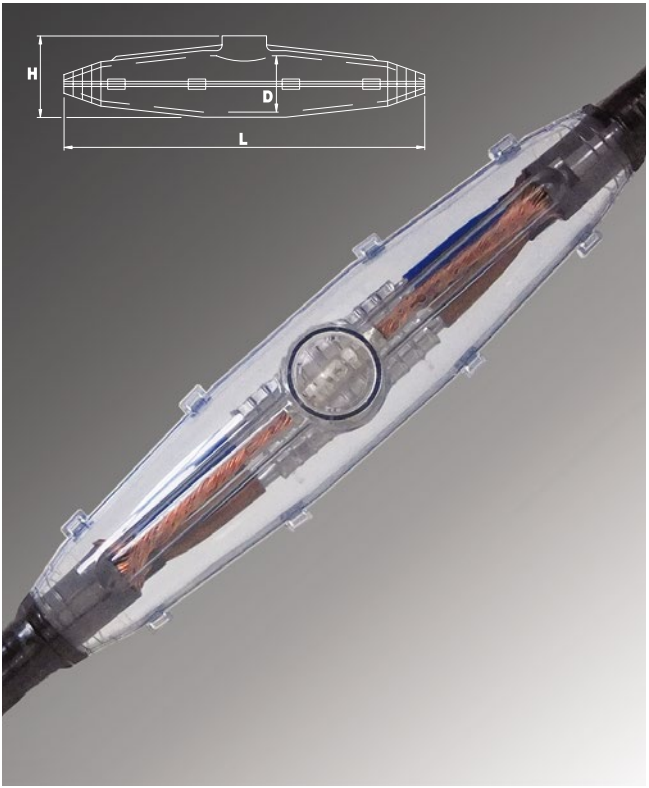
H
D
L

M...V-Euroline

						3x	4x	5x
		L mm	D mm	H mm	max. Ø mm	mm²		
M	11 V	190	36	50	26	1.5 - 6	1.5 - 6	1.5 - 6
	12 V	260	47	63	34	10 - 16	10 - 16	10 - 16
	13 SV	310	55	68	43	16 - 25	16 - 25	
	13 V	360	55	75	43	25 - 35	25 - 35	
	14 V	400	70	95	48	50 - 70	50 - 70	

						3x	4x
		L mm	D mm	H mm	max. Ø mm	mm²	
M	11 V	190	36	50	26	1.5/1.5 - 6/6	1.5/1.5 - 6/6
	12 V	260	47	63	34	10/10 - 16/16	10/10 - 16/16
	13 SV	310	55	68	43	16/16 - 25/25	
	13 V	360	55	75	43	25/25 - 35/35	
	14 V	400	70	95	48	50/50 - 70/70	

CELLPACK
Electrical Products

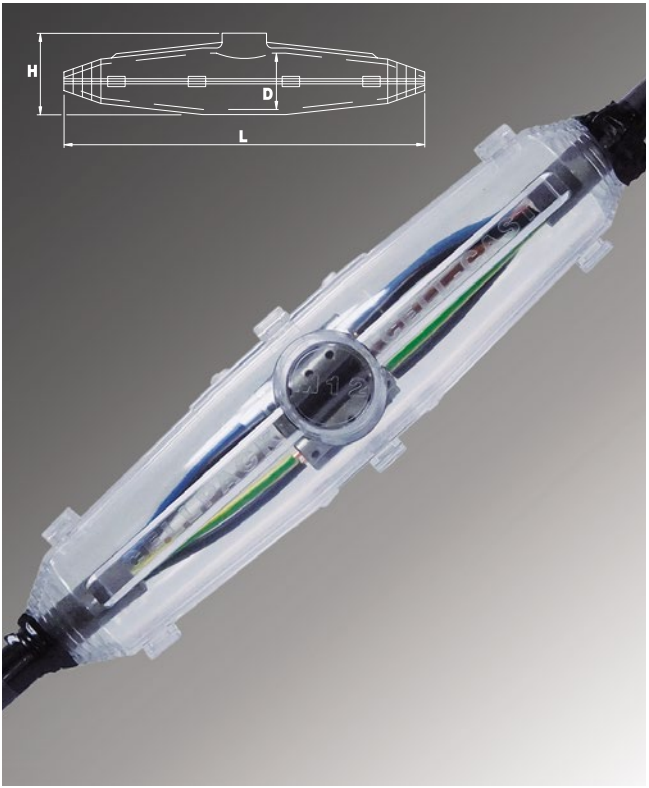

T

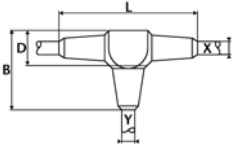

3x

4x

5x

		L mm	B mm	D mm	max. Ø mm	max. mm²					
						X	Y	X	Y	X	Y
T	1	240	138	50	22	10	10	6	6	4	4
	2	267	154	60	30	25	25	16	10	10	10
	2.5	310	183	75	37	50	50	35	16	16	10
	3	354	212	90	42	70	70	50	25	25	16
	4	432	262	110	52	120	120	95	50	50	
	5	550	290	130	62	185	150	185	150	120	

3x

4x

		L mm	B mm	D mm	max. Ø mm	max. mm²			
						X	Y	X	Y
T	1	240	138	50	22	6/6	6/6		
	2	267	154	60	30	16/16	10/10	16/16	16/16
	2.5	310	183	75	37	35/35	16/16	35/16	25/16
	3	354	212	90	42	50/50	25/25	50/25	35/16
	4	432	262	110	52	95/95	50/50	95/50	70/35
	5	550	290	130	62	185/185	70/70	150/70	95/50

CELLPACK
Electrical Products

T...V AK

		L mm	B mm	D mm	max. Ø mm	mm²			
						X	Y	X	Y
T	1 V AK	240	138	50	22	1.5 - 6	1.5 - 6	1.5 - 6	1.5 - 6
	2 V AK	267	154	60	30	4 - 16	4 - 16	4 - 16	4 - 16
	2.5 V AK	310	183	75	37	6 - 25	6 - 16	6 - 25	6 - 16

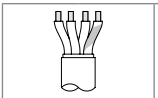

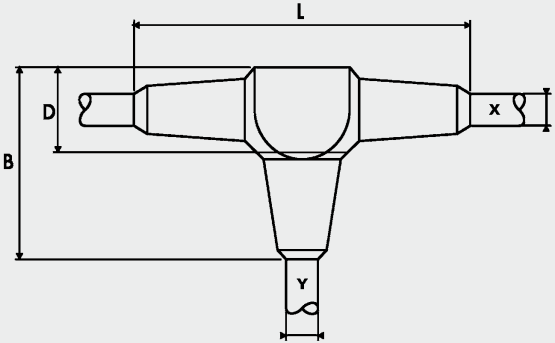

CELLPACK
Electrical Products

Y

3x

4x

5x

		L mm	B mm	D mm	max. Ø mm K	max. Ø mm K1	max. mm² X	max. mm² Y	max. mm² X	max. mm² Y	max. mm² X	max. mm² Y
Y	00	150	75	38	19	19	4	2.5	4	2.5	4	2.5
	0	185	80	45	17	17	6	6	6	6	6	6
	1	240	110	60	22	22	10	10	10	10	10	10
	2	285	120	65	34	30	25	25	25	25	25	25
	3	240	145	100	42	37	50	25	50	35	25	25
	3.5	300	150	110	54	38	70	25	50	35	35	35
	4	285	170	110	53	37	95	35	95	50	50	35
	4.5	335	193	120	56	42	150	70	150	70	120	70
	5	382	220	140	62	52	240	150	240	95	150	95
	6	570	275	180	90	80	300	240	300	185	150	150

3x

		L mm	B mm	D mm	max. Ø mm K	max. Ø mm K1	max. mm² X	max. mm² Y
	0	185	80	45	17	17	6/6	6/6
	1	240	110	60	22	22	10/10	10/10
	2	285	120	65	37	33	16/16	10/10
	3	240	145	100	42	37	25/25	16/16
	3.5	300	150	110	54	38	35/35	25/25
	4	285	170	110	53	37	70/70	25/25
	4.5	335	193	120	56	42	120/120	95/95
	5	382	220	140	62	52	150/150	95/95
	6	570	275	180	90	80	240/120	185/95

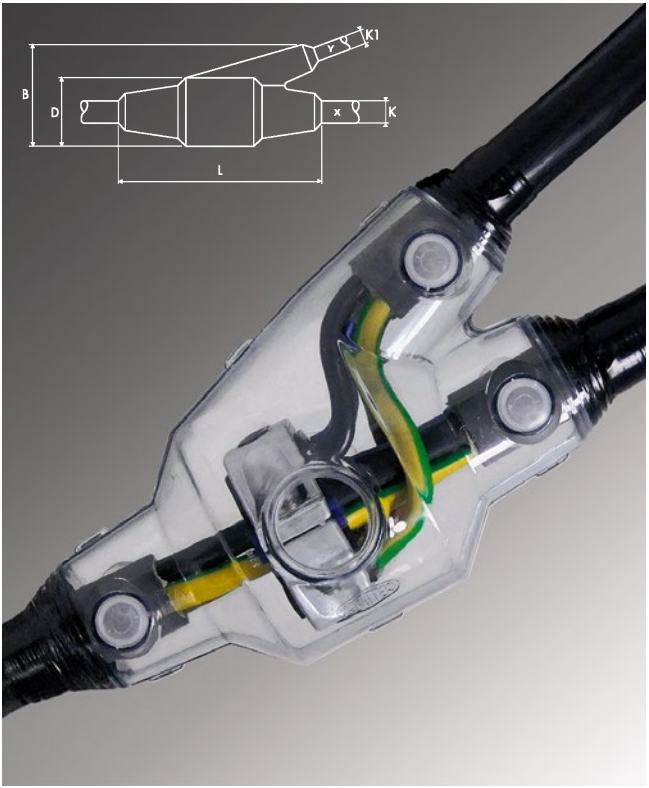
K1
B
D
x
K
L

Y...V AK

		L mm	B mm	D mm	max. Ø mm	mm²			
						4x		5x	
						X	Y	X	Y
Y	0 V AK	185	80	45	17	1.5 - 4	1.5 - 4	1.5 - 4	1.5 - 4
	1 V AK	240	110	60	22	2.5 - 6	2.5 - 6	2.5 - 6	2.5 - 6
	2 V AK	285	120	65	33	4 - 16	4 - 16	4 - 16	4 - 16

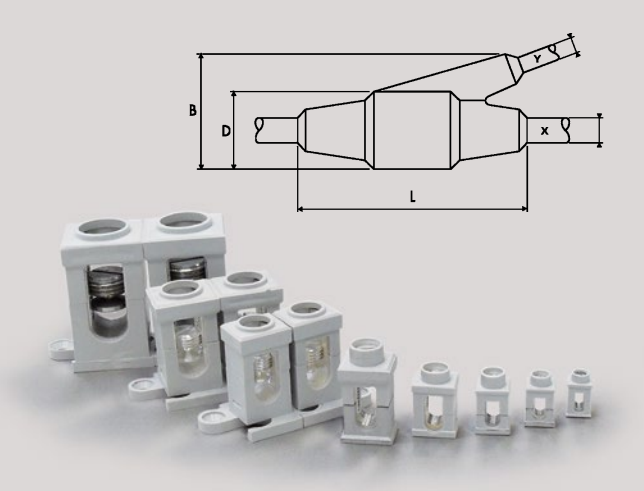

CELLPACK
Electrical Products

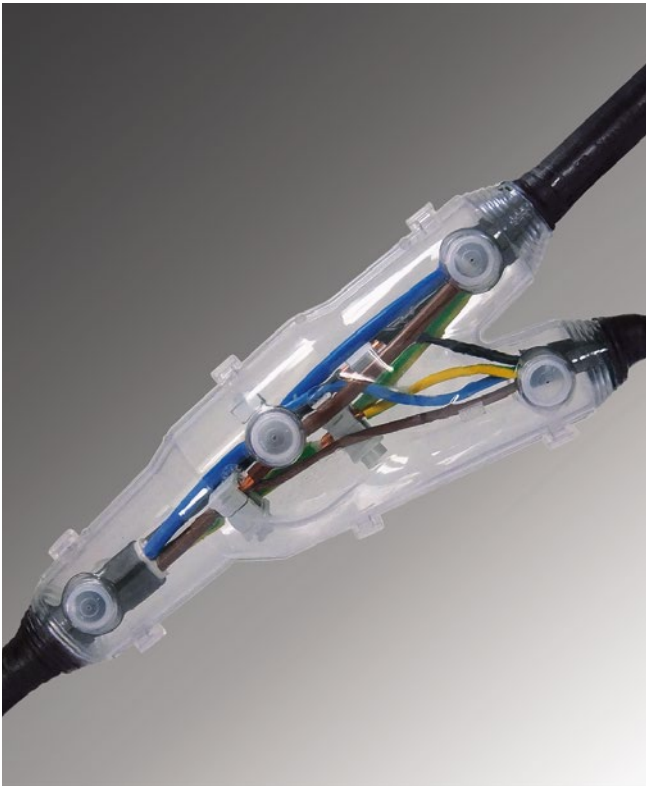

Universal Box KG

	L mm	B mm	H mm	max. Ø K mm	mm²
Universal Box KG 286 ml	85	85	45	15	0.5 - 2.5

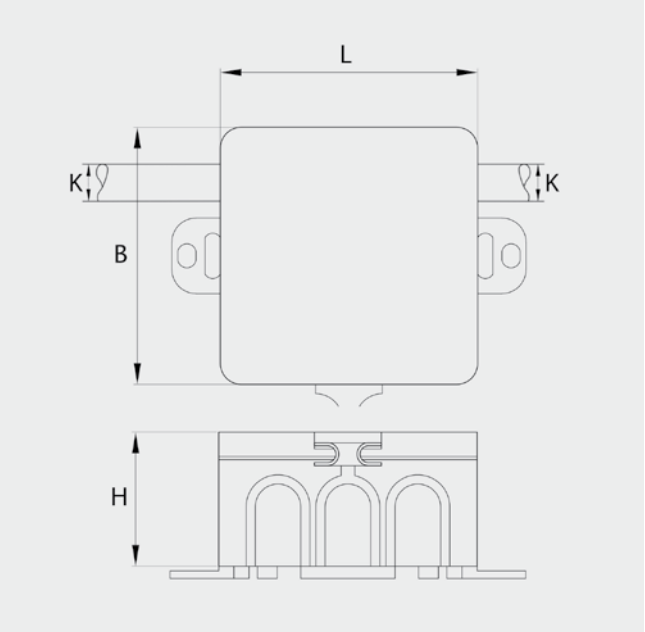

CELLPACK
Electrical Products

EG

		ml
EG	80	80
	143	143
	286	286
	370	370
	464	464
	730	730
	1000	1000
	1150	1150
	1500	1500
	2000	2000

KG

CELLPACK
Electrical Products

		ml
KG	143	143
	286	286
	730	730
	2000	2000

EASYCELL®

		L mm	B mm	H mm	mm² 3x	mm² 4x	mm² 5x
EASY	2 V	86	47	27	1.5 - 2.5		
	3 V	146	55	35	1.5 - 6	1.5 - 6	1.5 - 6
	4 V	180	69	40	6 - 16	6 - 16	6 - 16
	5 V	240	75	44	16 - 25	16 - 25	16 - 25

		L mm	B mm	H mm	mm² 3x X	mm² 3x Y	mm² 4x X	mm² 4x Y	mm² 5x X	mm² 5x Y
EASY	6 V	220	110	53	6 - 16	2.5 - 16	6 - 16	2.5 - 16	6 - 16	2.5 - 16
	7 V	260	130	65	16 - 35	2.5 - 35	16 - 35	2.5 - 35	16 - 35	2.5 - 35

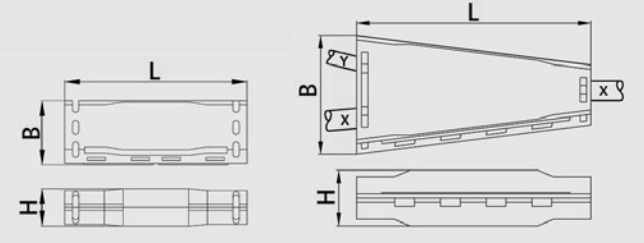

CELLPACK
Electrical Products

Power Gel

	ml
Power Gel	400
	1000

Power Gel
15-30 °C
A:B = 1:1
A:B = 1:1
www.cellpack.com
CELLPACK
Power-Gel B
CELLPACK
Power-Gel A

CSV-T

		L mm	L1 mm	B mm	D mm	D1 mm
CSV-T	6-50	45	21	18	9.2	11.0
	16-95	60	28	24	12.5	16.0
	50-150	70	33	28	16.0	21.0
	95-240	120	58	35	20.0	27.0
	240-400	150	73	42	26.0	30.0

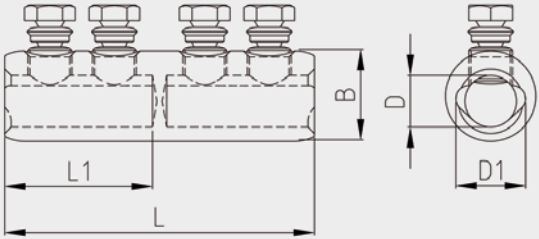

CP CSV-T 16-95
11A02
CP CSV-T 50-150
11A02

CSK

		L mm	L1 mm	D mm	D1 mm	D2 mm
CSK	6-50	65	30	22	13	9.4
	16-95	65	30	22	13	12.5
	50-150	80	35	28	13	16
	95-240	110	60	33	13	20
	240-400	135	75	40	17	26

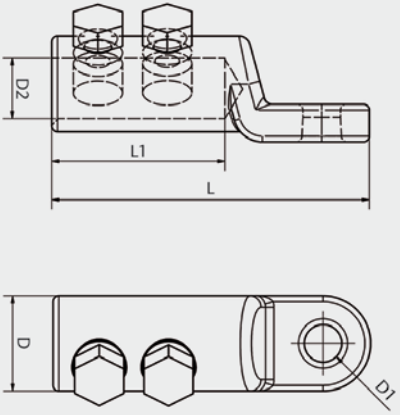

CELLPACK
Electrical Products

CONDUC
TAPE

Premio 233

CELLPACK
Electrical Products

	L m	B mm	D mm
Premio 233	6	19	0.18
	20	19	0.18
	33	19	0.18

Premio 235

	L m	B mm	D mm
Premio 235	20	19	0.18

Premio 388

CELLPACK
Electrical Products

	L m	B mm	D mm
Premio 388	6	19	0.18
	20	19	0.18

No. 128

	L m	B mm	D mm	
No. 128	10	15	0.15	1, 2
	10	19	0.15	1, 2
	25	19	0.15	1, 2
	25	25	0.15	1, 2
	25	30	0.15	1, 2
	25	38	0.15	1
	25	50	0.15	1

1 2

KRS

CELLPACK
Electrical Products

	L m	B mm	D mm
KRS	10	50	0.5

UNIVERSAL CLEANER 121

	ml
UNIVERSAL CLEANER 121	400

ZINC SPRAY 171

CELLPACK
Electrical Products

	ml
ZINC SPRAY 171	400

CABLE GLISS

	ml
CABLE GLISS	400

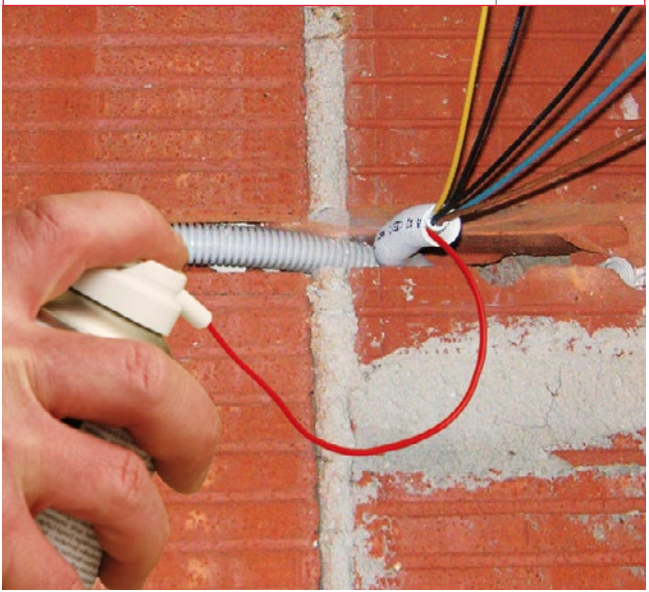

EASY-GLIDE

CELLPACK
Electrical Products

	ml
EASY-GLIDE	250 1050 5000

LG

	ml
LG	250 500

DUCT SEAL

CELLPACK
Electrical Products

	kg
DUCT SEAL	0.454 2.5

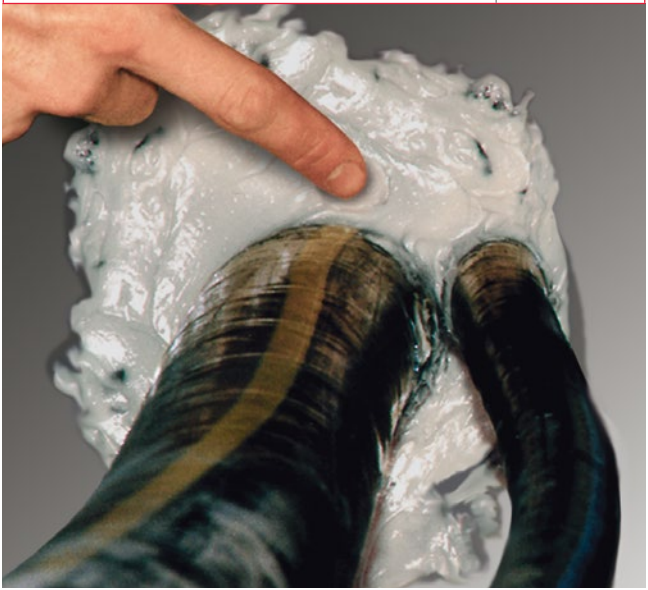

INTERNATIONAL SALES ORGANISATIONS

Europe

Cellpack AG
Electrical Products
Anglikerstrasse 99
5612 Villmergen
Schweiz
Tel. +41 56 6181 234
Fax +41 56 6181 245
verkauf.epschweiz@cellpack.com

Cellpack GmbH
Electrical Products
Carl-Zeiss-Straße 20
79761 Waldshut-Tiengen
Deutschland
Tel. +49 7741 6007-0
Fax +49 7741 64989
electrical.products@cellpack.com

Cellpack Benelux B.V.
Keersluisweg 13
1332 EE Almere Buiten
Nederland
Tel. +31 36 549 03 36
Fax +31 36 532 74 99
info@cellpack.nl

Cellpack Polska Sp. z o.o.
ul. Matuszewska 14,
03-876 Warszawa
Polska
Tel. +48 22 853 53 54
Fax +48 22 853 53 56
biuro@cellpack.pl

Cellpack Italia Srl
Via Petrarca, 2
22100 Como
Italia
Tel. +39 349 903 41 61
epitalia@cellpack.com

Behr Bircher Cellpack
Ibérica, S.A.
C/.Mas Pujol, nr. 47 – Nave 4
Pol. Ind. Sector V
08520 – Les Franqueses del Vallès
Barcelona – España
Tel. +34 93 846 63 76
Fax +34 93 849 12 06
comercial@cellpackiberica.com

Behr Bircher Cellpack
BBC France s.à.r.l.
277, Boulevard des Technologies
54710 Ludres
France
Tel. +33.3.83.25.60.07
Fax +33.3.83.25.88.27
info@cellpack-ep.fr

International Distributors

Cellpack AG
Electrical Products
Anglikerstrasse 99
5612 Villmergen
Schweiz
Tel. +41 56 6181 818
Fax +41 56 6181 245
EPSalesExport@cellpack.com

Middle East

Behr Bircher Cellpack
BBC AG DMCC Branch
Jumeirah Lakes Towers
Dubai, UAE
Tel. +971 50 952 28 00
EPSalesME@cellpack.com

Asia Pacific

Cellpack Far East Pte Ltd
128 Joo Seng Road # 06 – 01
Singapore 368356
Tel. +65 6747 7024
Fax +65 6841 4554
info@cellpack.com.sg

Behr Bircher Cellpack
BBC Malaysia Sdn. Bhd.
No. 8, Jalan TU 50
Taman Tasik Utama
Ayer Keroh
75450 Melaka
Malaysia
Tel. +60 6 251 95 30
Fax +60 6 251 95 31
info@cellpack.com.my
www.cellpack.com.my

Behr Bircher Cellpack
BBC Australia Pty Ltd
PO Box 73
Oakdale, NSW, 2570
Australia
Tel. +61 407 103 621
Fax +61 2 4659 6531
New Zealand
Tel. +64 21 591 960
Fax +64 9 436 0897
salesanz@cellpack.com

Further information
on our products:
electricalproducts.cellpack.com

www.cellpack.com

D850 • SAP-No. 200323 • 1015

Systems For Professionals

CELLPACK
Electrical Products

a BBC GROUP company